DISASSEMBLY

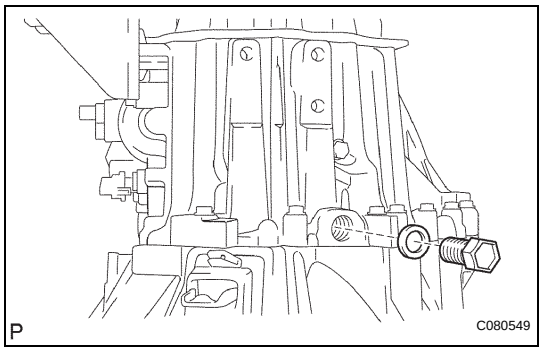

1. REMOVE MANUAL TRANSMISSION FILLER PLUG

(a) Remove the manual transmission filler plug and gasket from the manual transmission case.

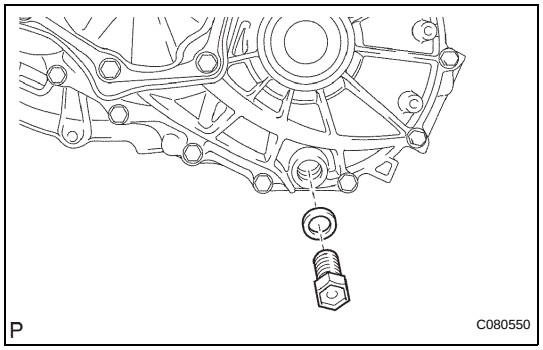

2. REMOVE DRAIN (MTM) PLUG SUB-ASSEMBLY

(a) Remove the drain (MTM) plug sub-assembly and gasket from the manual transmission case.

3. REMOVE SPEEDOMETER SENSOR (w/o ABS)

(a) Remove the bolt and speedometer sensor from the transaxle case.

(b) Remove the O-ring from the speedometer sensor.

4. REMOVE SPEEDOMETER DRIVEN HOLE COVER SUB-ASSEMBLY (w/ ABS)

(a) Remove the bolt and speedometer driven hole cover sub-assembly from the transaxle case.

(b) Remove the O-ring from the speedometer driven hole cover.

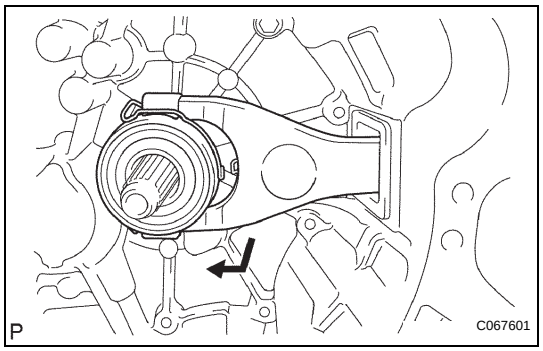

5. REMOVE CLUTCH RELEASE FORK SUB-ASSEMBLY

(a) Remove the clutch release fork sub-assembly with the clutch release bearing assembly from the transaxle case.

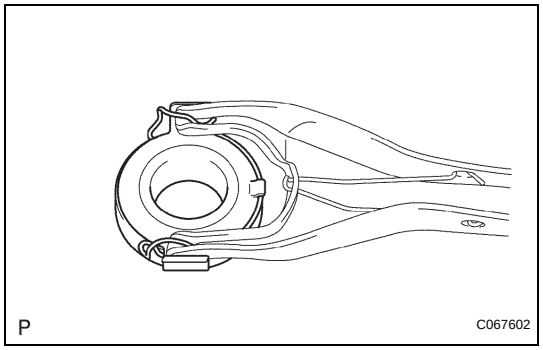

6. REMOVE CLUTCH RELEASE BEARING ASSEMBLY

(a) Remove the clutch release bearing clip and clutch release bearing assembly from the clutch release fork sub-assembly.

cardiagn.com

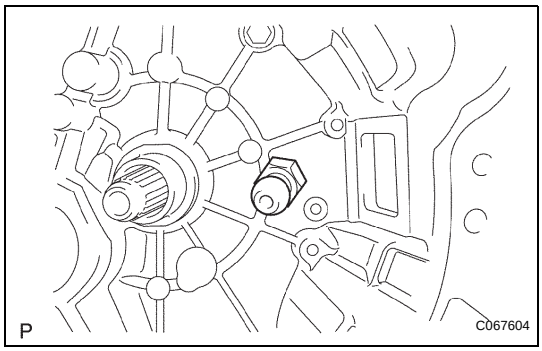

7. REMOVE RELEASE FORK SUPPORT

(a) Remove the clutch release fork support from the transaxle case.

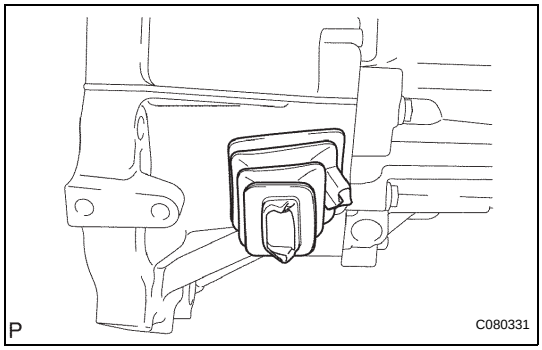

8. REMOVE CLUTCH RELEASE FORK BOOT

(a) Remove the clutch release fork boot from the transaxle case.

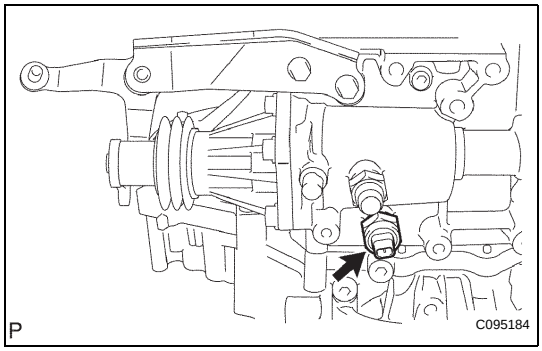

9. REMOVE BACK UP LIGHT SWITCH ASSEMBLY

(a) Remove the back up light switch assembly and gasket from the manual transmission case.

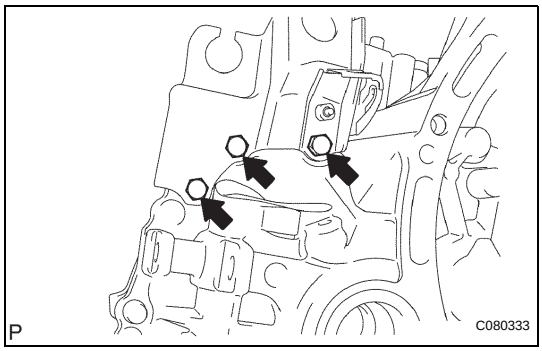

10. REMOVE FLOOR SHIFT CONTROL LEVER HOUSING SUPPORT BRACKET

(a) Remove the 3 bolts and floor shift control lever housing support bracket from the transaxle case.

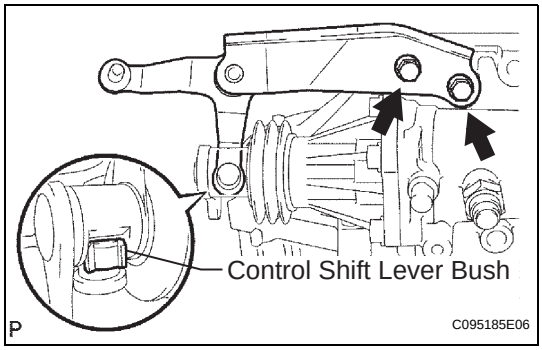

11. REMOVE SELECTING BELL CRANK ASSEMBLY

(a) Remove the 2 bolts and selecting bell crank assembly from the manual transmission case.

(b) Remove the control shift lever bush.

cardiagn.com

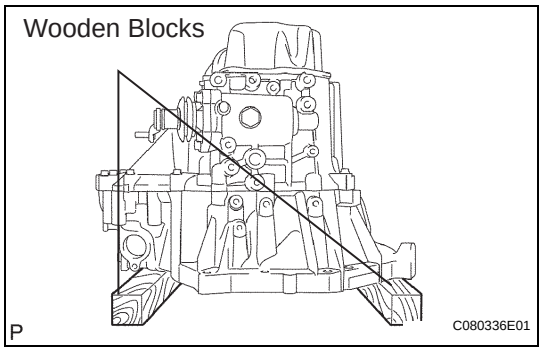

12. FIX MANUAL TRANSAXLE ASSEMBLY

(a) Place the manual transaxle assembly on wooden blocks.

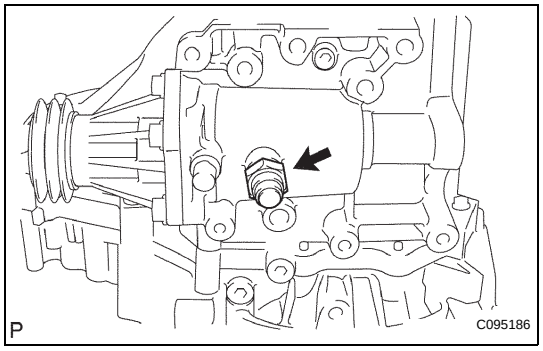

13. REMOVE LOCK BALL ASSEMBLY NO. 1

(a) Remove the lock ball assembly No. 1 from the manual transmission case.

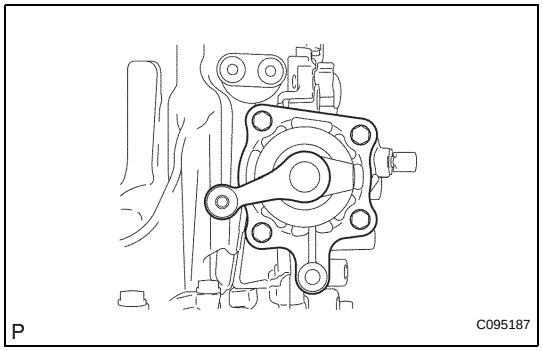

14. REMOVE SHIFT AND SELECT LEVER SHAFT ASSEMBLY

(a) Remove the 4 bolts, shift & select lever shaft assembly and gasket from the manual transmission case.

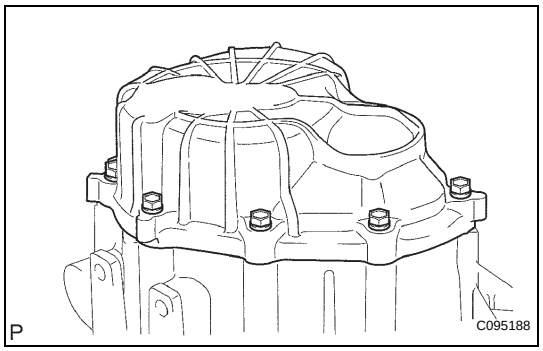

15. REMOVE MANUAL TRANSMISSION CASE COVER SUB-ASSEMBLY

(a) Remove the 9 bolts.

cardiagn.com

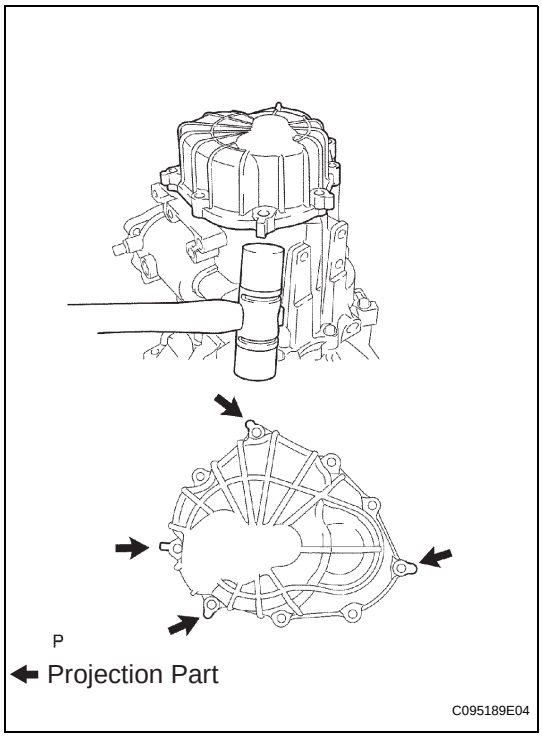

(b) Using a plastic hammer, carefully tap the projection of the manual transmission case cover sub-assembly to remove it from the manual transmission case.
NOTICE:
Do not damage the manual transmission case.

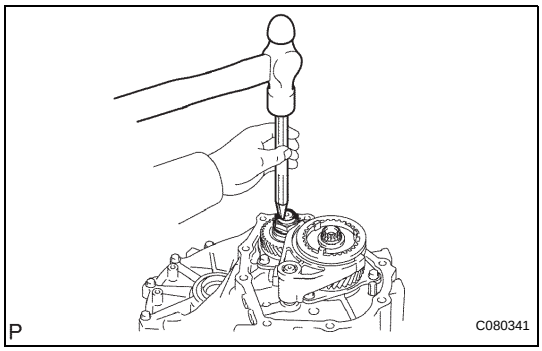

16. REMOVE MANUAL TRANSMISSION OUTPUT SHAFT REAR SET NUT

(a) Using a chisel and a hammer, loosen the staked part of the manual transmission output shaft rear set nut.

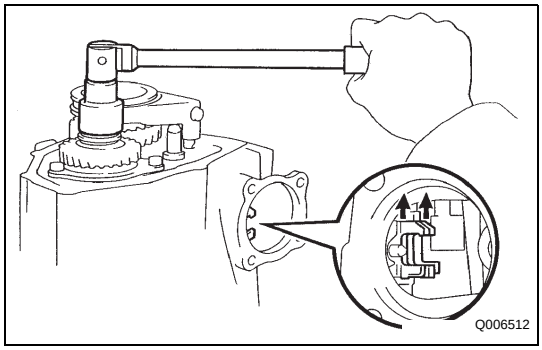

(b) Engage two gears simultaneously to lock the transmission.
(c) Remove the manual transmission output shaft rear set nut.
(d) Disengage the two gears.

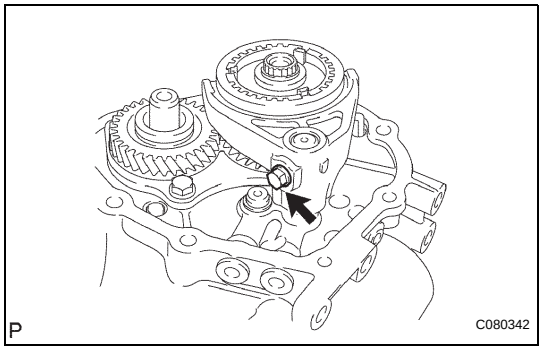

17. REMOVE GEAR SHIFT FORK NO. 3

(a) Remove the gear shift fork lock bolt from the gear shift fork No. 3.

cardiagn.com

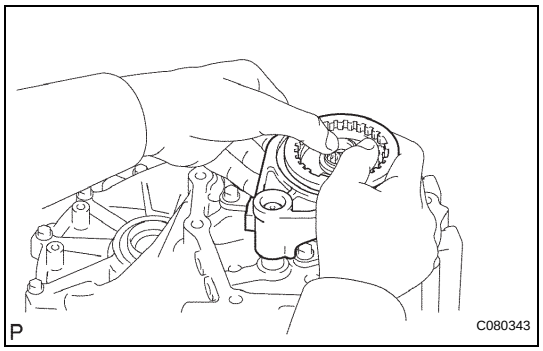

(b) Remove the transmission hub sleeve No. 3 with the gear shift fork No. 3 from the transmission clutch hub No. 3.

18. INSPECT 5TH GEAR THRUST CLEARANCE (See page MX-47)

19. INSPECT 5TH GEAR RADIAL CLEARANCE (See page MX-47)

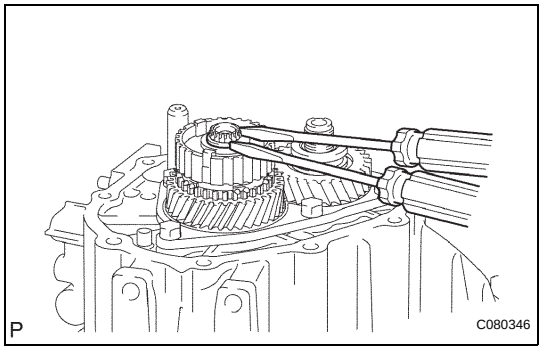

20. REMOVE TRANSMISSION CLUTCH HUB NO. 3

(a) Using 2 screwdrivers and a hammer, tap out the snap ring.
HINT:
Use a shop rag or piece of cloth to keep the snap ring from flying.

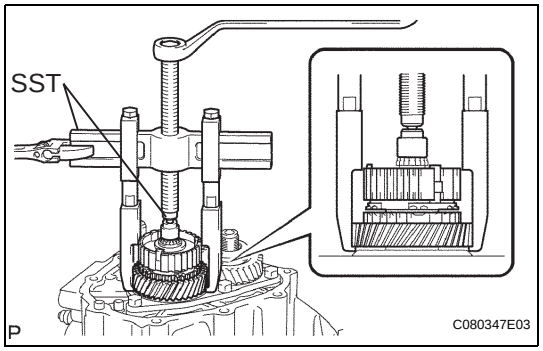

(b) Using SST, remove the transmission clutch hub No. 3, 5th gear and synchronizer ring No. 3 from the input shaft.

SST 09950-40011 (09951-04020, 09952-04010, 09953-04030, 09954-04010, 09955-04071, 09957-04010), 09950-60010 (09951-00200)

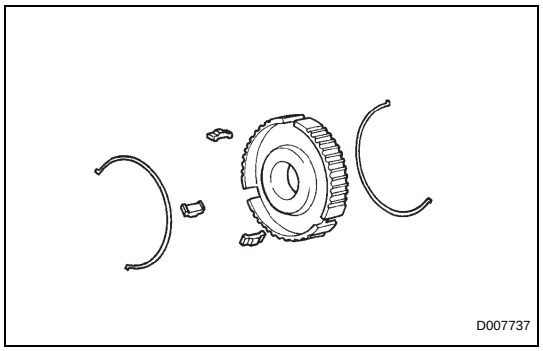

(c) Remove the 3 synchromesh shifting keys and 2 synchromesh shifting key springs from the transmission clutch hub No. 3.

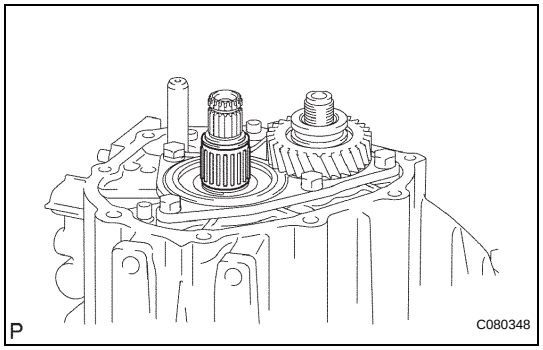

21. REMOVE 5TH GEAR NEEDLE ROLLER BEARING

(a) Remove the 5th gear needle roller bearing and 5th gear bearing spacer from the input shaft.

cardiagn.com

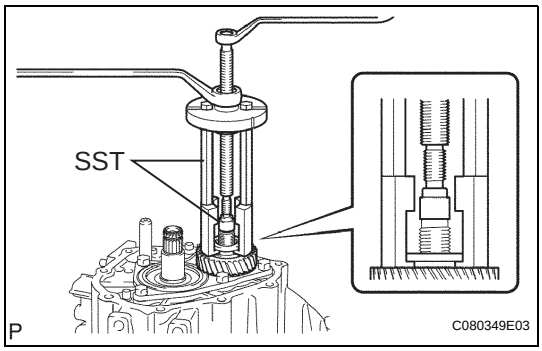

22. REMOVE 5TH DRIVEN GEAR

(a) Using SST, remove the 5th driven gear from the output shaft.

SST 09950-30012 (09951-03010, 09953-03010, 09954-03010, 09955-03011, 09957-04010), 09950-60010 (09951-00190)

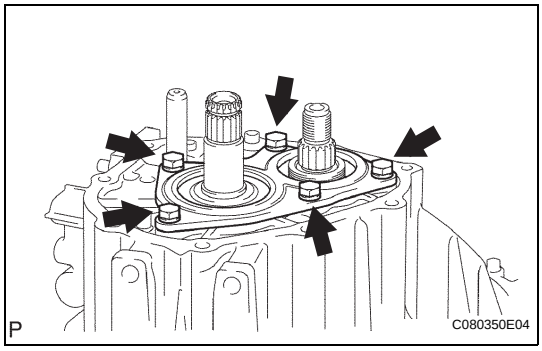

23. REMOVE BEARING RETAINER REAR (MTM)

(a) Remove the 5 bolts and bearing retainer rear (MTM) from the manual transmission case.

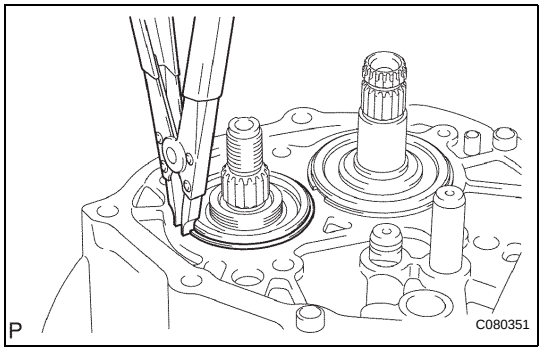

24. REMOVE OUTPUT SHAFT REAR BEARING HOLE SNAP RING

(a) Using a snap ring expander, remove the output shaft rear bearing hole snap ring from the output shaft.

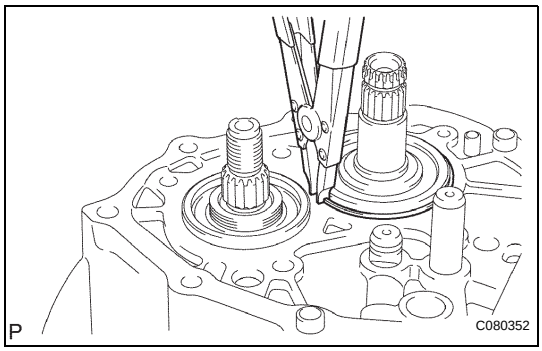

25. REMOVE INPUT SHAFT REAR BEARING HOLE SNAP RING

(a) Using a snap ring expander, remove the input shaft rear bearing hole snap ring from the input shaft.

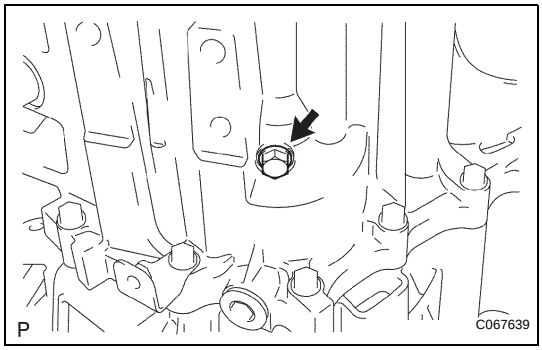

26. REMOVE REVERSE IDLER GEAR SHAFT BOLT

(a) Remove the reverse idler gear shaft bolt and gasket from the manual transmission case.

cardiagn.com

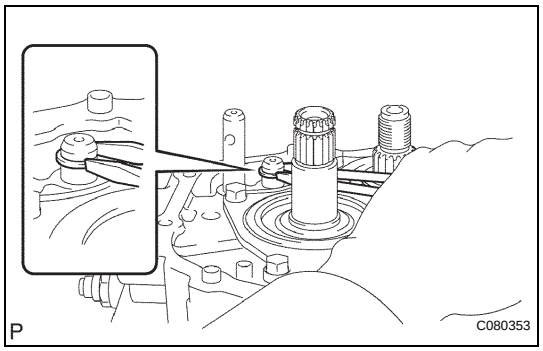

27. REMOVE SHIFT FORK SHAFT SHAFT SNAP RING

(a) Using 2 screwdrivers and a hammer, tap out the snap ring from the gear shift fork shaft No. 2.
HINT:
Use a shop rag or piece of cloth to keep the snap ring from flying.

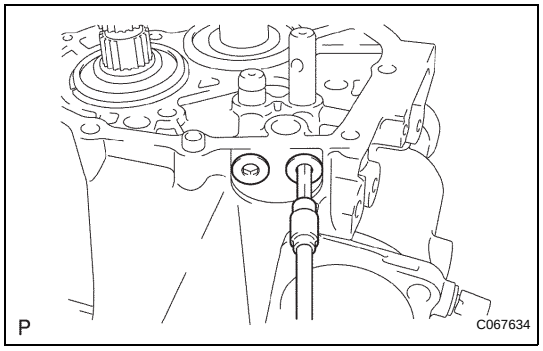

28. REMOVE SHIFT DETENT BALL

(a) Using a hexagon wrench, remove the 2 shift detent ball plugs from the manual transmission case.

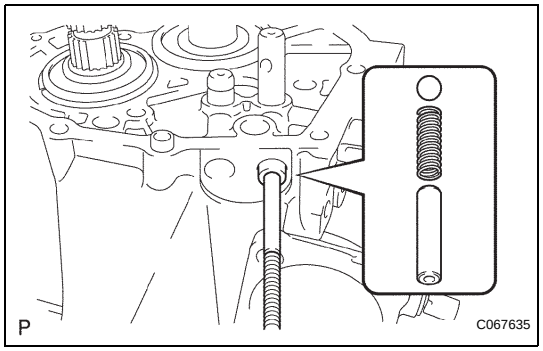

(b) Using a magnetic finger, remove the 2 seats, 2 springs and 2 shift detent balls from the manual transmission case.

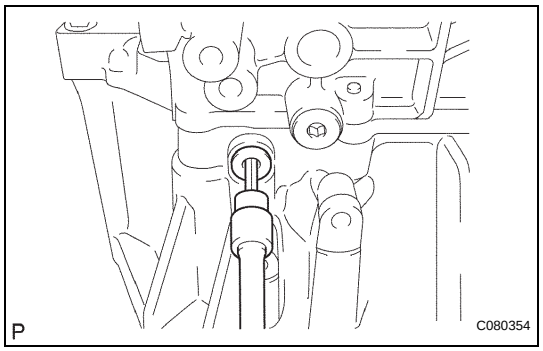

(c) Using a hexagon wrench, remove the shift detent ball plug from the transaxle case.

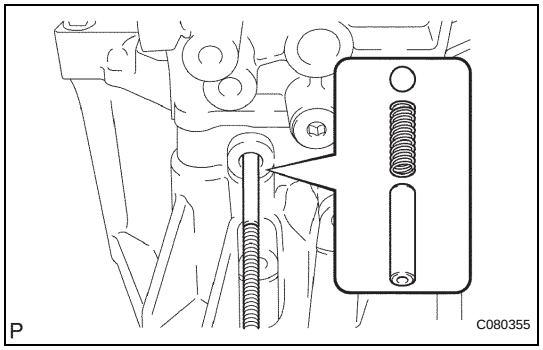

(d) Using a magnetic finger, remove the seat, spring and shift detent ball from the transaxle case.

cardiagn.com

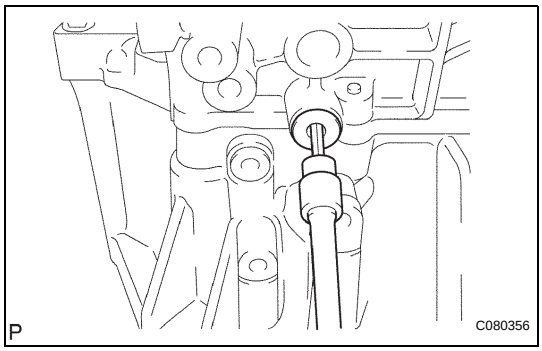

29. REMOVE LOCK BALL ASSEMBLY NO. 1

(a) Using a hexagon wench, remove the lock ball assembly No. 1 from the manual transmission case.

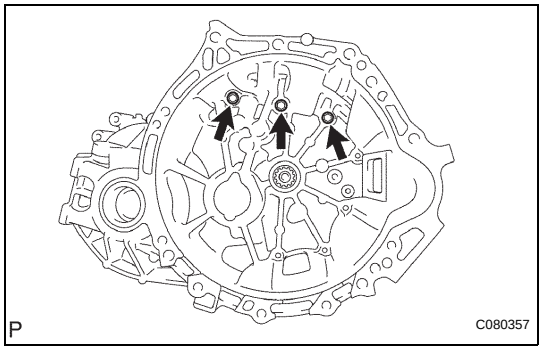

30. REMOVE MANUAL TRANSMISSION CASE

(a) Remove the 3 bolts from the transaxle case side.

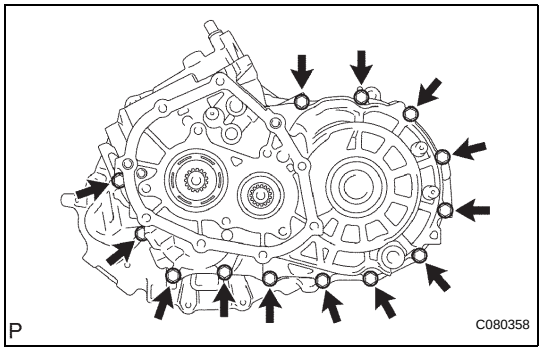

(b) Remove the 13 bolts from the manual transmission case side.

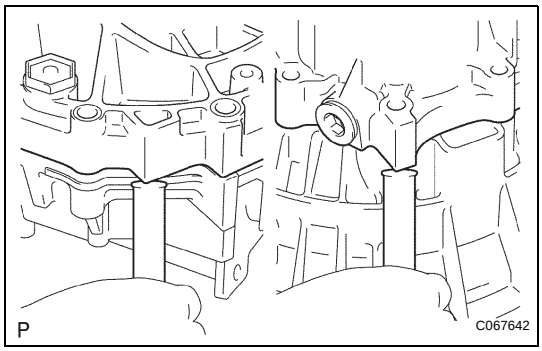

(c) Using a brass bar and a hammer, carefully tap the projection of the manual transmission case to remove it from the transaxle case.
NOTICE:
Do not damage the manual transmission case and transaxle case.

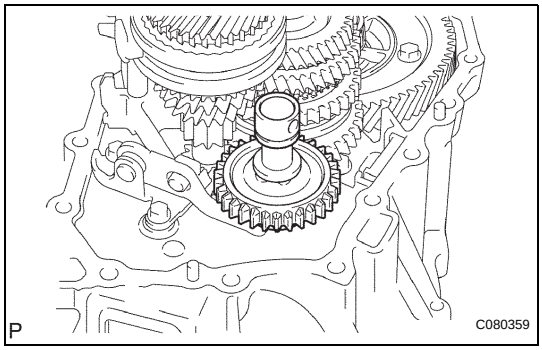

31. REMOVE REVERSE IDLER GEAR SUB-ASSEMBLY

(a) Remove the reverse idler gear sub-assembly, thrust washer and reverse idler gear shaft from the transaxle case.

MX

cardiagn.com

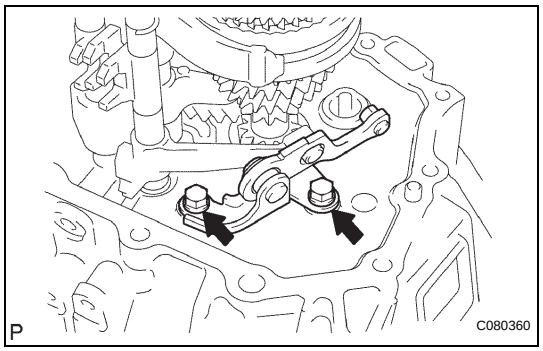

32. REMOVE REVERSE SHIFT ARM BRACKET ASSEMBLY

(a) Remove the 2 bolts and reverse shift arm bracket assembly from the transaxle case.

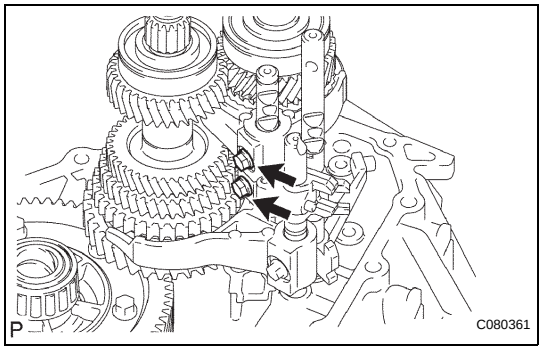

33. REMOVE GEAR SHIFT FORK SHAFT NO. 2

(a) Remove the 2 bolts from the gear shift fork No. 2 and gear shift head No. 1.

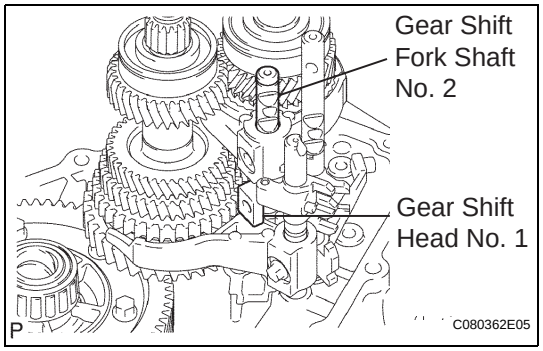

(b) Remove the gear shift fork shaft No. 2 and gear shift head No. 1 from the transaxle case.

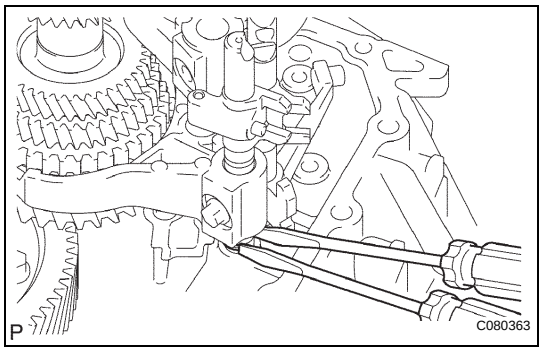

34. REMOVE GEAR SHIFT FORK SHAFT SUB-ASSEMBLY NO. 1

(a) Using 2 screwdrivers and a hammer, tap out the snap ring.
HINT:
Use a shop rag or piece of cloth to keep the snap ring from flying.

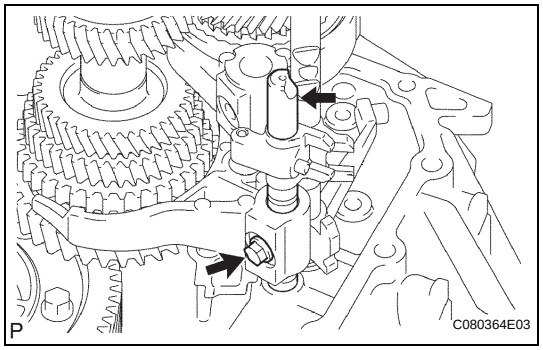

(b) Remove the gear shift fork lock bolt and gear shift fork shaft sub-assembly No. 1 from the gear shift fork No. 1.

cardiagn.com

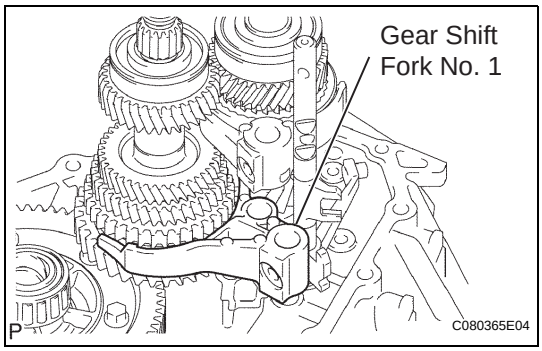

(c) Remove the gear shift fork No. 1.

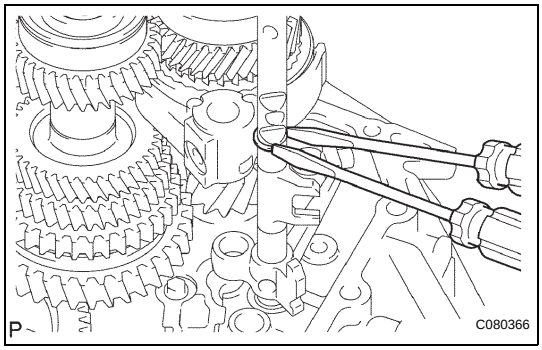

35. REMOVE GEAR SHIFT FORK SHAFT NO. 3

(a) Using 2 screwdrivers and a hammer, tap out the snap ring from the gear shift fork shaft No. 3.
HINT:
Use a shop rag or piece of cloth to keep the snap ring from flying.

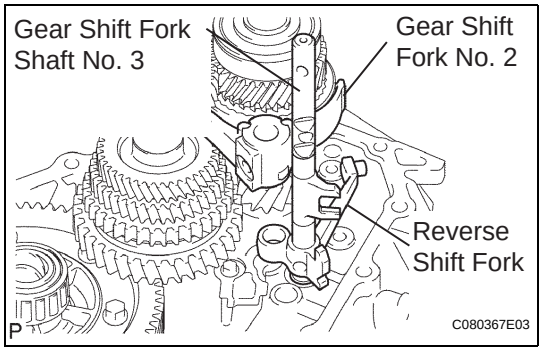

(b) Remove the shift fork shaft No. 3 with the reverse shift fork and gear shift fork No. 2 from the transaxle case.

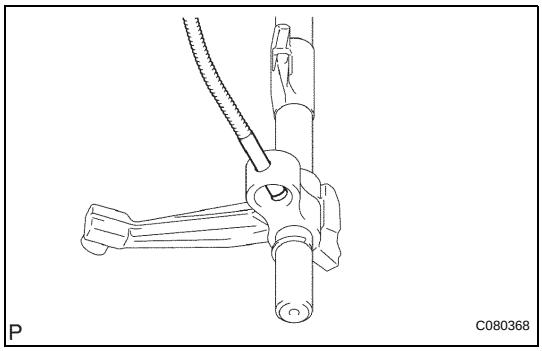

(c) Using a magnetic finger, remove the 2 balls from the reverse shift fork.

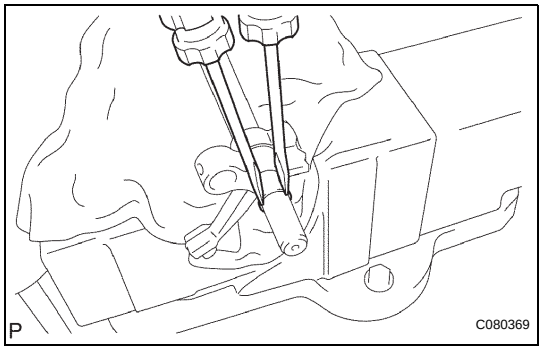

(d) Using 2 screwdrivers and a hammer, tap out the snap ring.
HINT:
Use a shop rag or piece of cloth to keep the snap ring from flying.

(e) Remove the reverse shift fork from the gear shift fork shaft No. 3.

MX

cardiagn.com

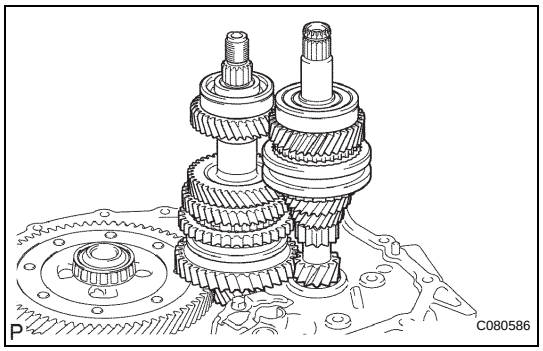

36. REMOVE INPUT SHAFT ASSEMBLY

(a) Remove the input and output shaft assembly from the transaxle case.

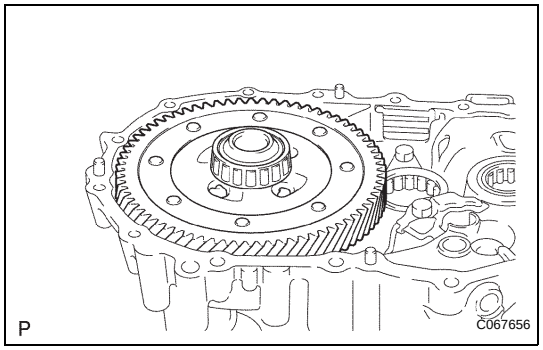

37. REMOVE DIFFERENTIAL CASE ASSEMBLY

(a) Remove the differential case assembly from the transaxle case.

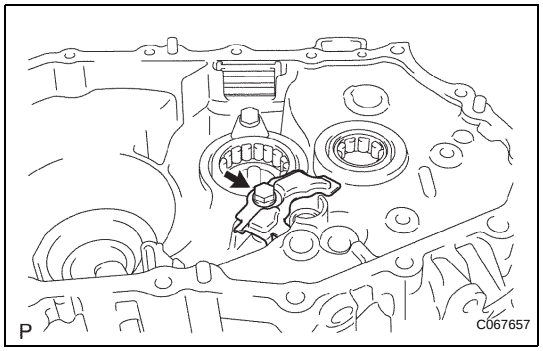

38. REMOVE MANUAL TRANSAXLE CASE RECEIVER

(a) Remove the bolt and manual transaxle case receiver from the transaxle case.

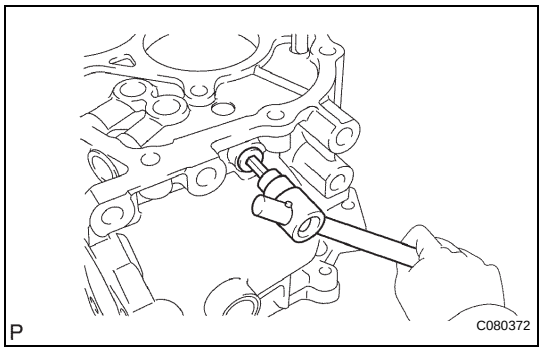

39. REMOVE REVERSE RESTRICT PIN ASSEMBLY

(a) Using a hexagon wrench, remove the reverse restrict pin plug from the manual transmission case.

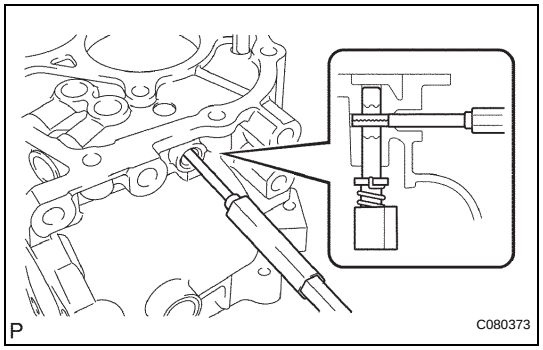

(b) Using a pin punch (ϕ5 mm) and a hammer, drive out the slotted pin and remove the reverse restrict pin assembly from the manual transmission case.

cardiagn.com

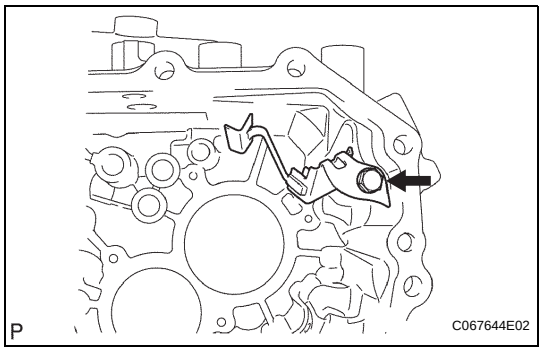

40. REMOVE OIL RECEIVER PIPE NO. 1 (MTM)

(a) Remove the bolt and oil receiver pipe No. 1 (MTM) from the manual transmission case.

NOTICE:

Be careful not to damage the oil receiver pipe No. 1 (MTM).

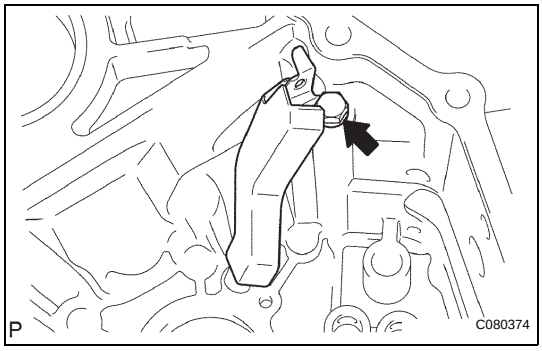

41. REMOVE OIL RECEIVER PIPE NO. 2 (MTM)

(a) Remove the bolt and oil receiver pipe No. 2 (MTM) from the manual transmission case.

NOTICE:

Be careful not to damage the oil receiver pipe No. 2 (MTM).

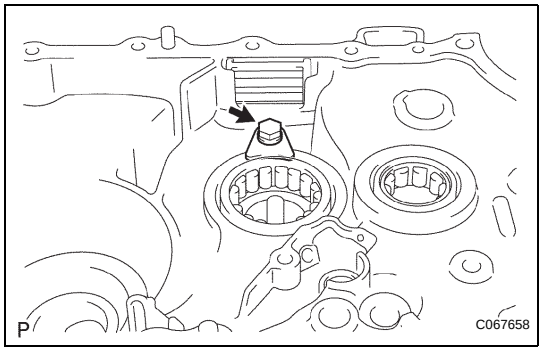

42. REMOVE BEARING LOCK PLATE

(a) Remove the bolt and bearing lock plate from the transaxle case.

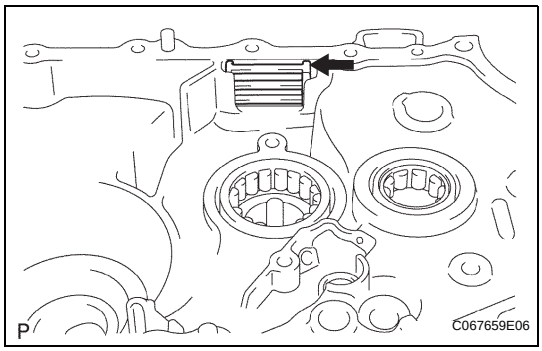

43. REMOVE TRANSMISSION MAGNET

(a) Remove the transmission magnet from the transaxle case.

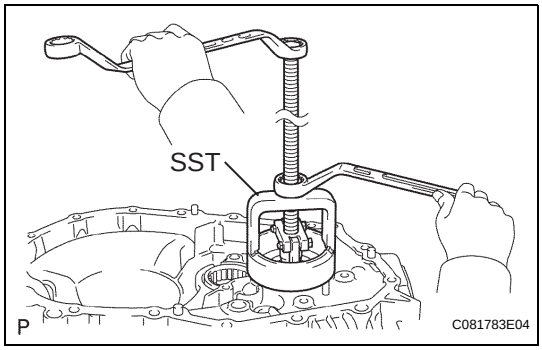

44. REMOVE INPUT SHAFT FRONT BEARING

(a) Using SST, remove the input shaft front bearing from the transaxle case.

SST 09612-65014 (09612-01050, 09612-01060)

MX

cardiagn.com

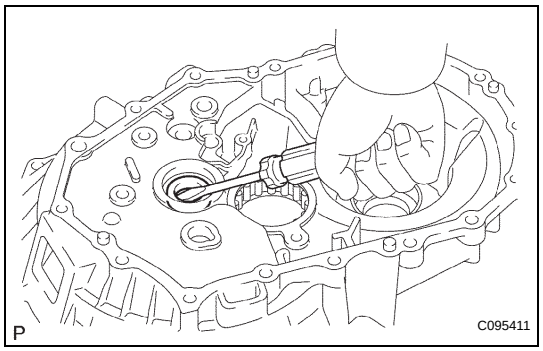

45. REMOVE FRONT TRANSAXLE CASE OIL SEAL

(a) Using a screwdriver, remove the front transaxle case oil seal from the transaxle case.

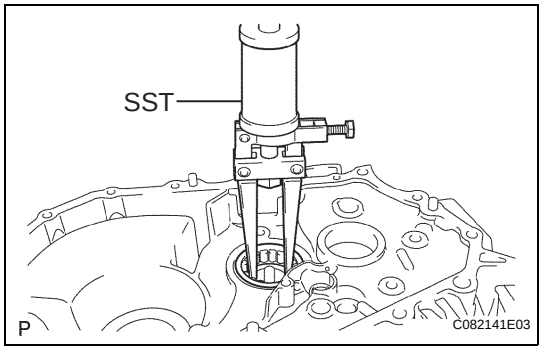

46. REMOVE OUTPUT SHAFT FRONT BEARING

(a) Using SST, remove the output shaft front bearing from the transaxle case.
SST 09308-00010

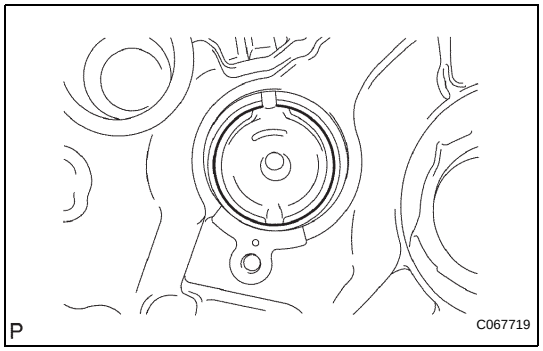

47. REMOVE OUTPUT SHAFT (MTM) COVER

(a) Remove the output shaft (MTM) cover from the transaxle case.

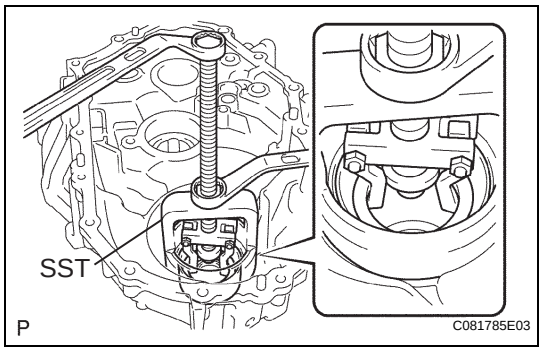

48. REMOVE FR DIFFERENTIAL CASE FRONT TAPERED ROLLER BEARING

(a) Using SST, remove the FR differential case front tapered roller bearing (outer race) and shim from the transaxle case.
SST 09612-65014 (09612-01040, 09612-01050)

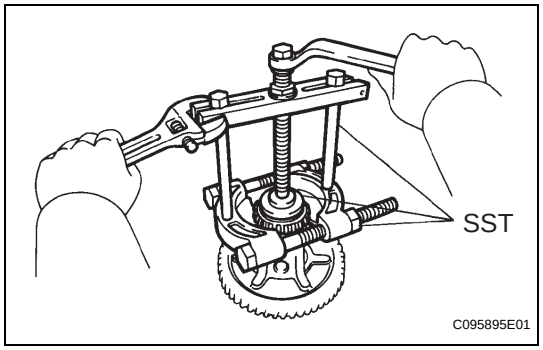

(b) Using SST, remove the FR differential case front tapered roller bearing (inner race) from the front differential case.
SST 09950-00020, 09950-00030, 09950-40011 (09957-04010), 09950-60010 (09951-00360)
NOTICE:
Be careful not to damage the bearing.

Cardiagn.com

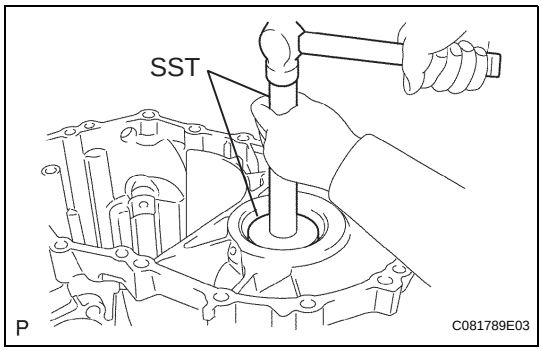

49. REMOVE TRANSAXLE CASE OIL SEAL

(a) Using SST and a hammer, drive out the transaxle case oil seal from the transaxle case.

SST 09950-60010 (09951-00530), 09950-70010 (09951-07150)

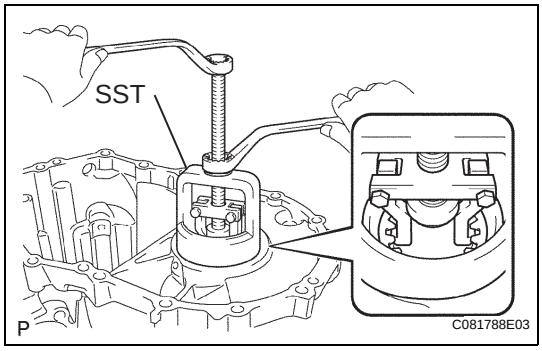

50. REMOVE FR DIFFERENTIAL CASE REAR TAPERED ROLLER BEARING

(a) Using SST, remove the FR differential case rear tapered roller bearing (outer race) and shim from the manual transmission case.

SST 09612-65014 (09612-01040, 09612-01050)

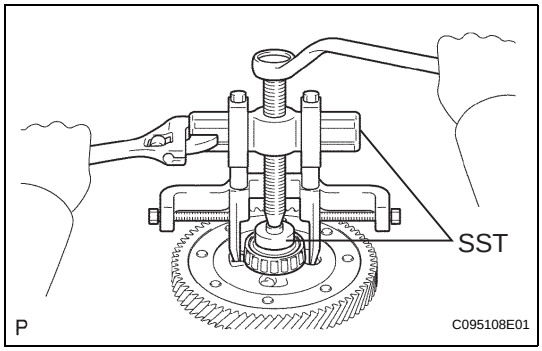

(b) Using SST and a hammer, remove the FR differential case rear tapered roller bearing (inner race) from the front differential case.

SST 09950-40011 (09951-04010, 09952-04010, 09953-04020, 09954-04010, 09955-04061, 09957-04010, 09958-04011), 09950-60010 (09951-00360)

NOTICE:

Be careful not to damage the bearing.

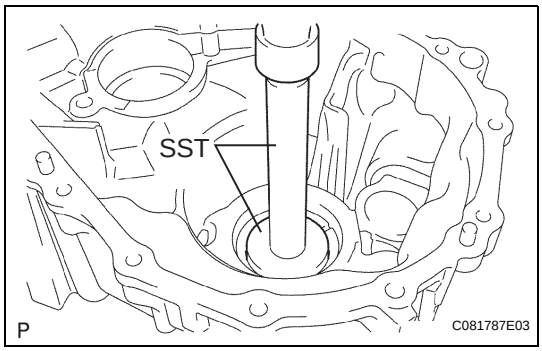

51. REMOVE TRANSMISSION CASE OIL SEAL

(a) Using SST and a hammer, remove the transmission case oil seal from the manual transmission case.

SST 09950-60010 (09951-00600), 09950-70010 (09951-07100)

52. INSPECT SYNCHRONIZER RING NO. 3 (See page MX-47)

53. INSPECT TRANSMISSION HUB SLEEVE NO. 3 (See page MX-48)

54. INSPECT 5TH GEAR (See page MX-48)

55. INSPECT REVERSE IDLER GEAR SUB-ASSEMBLY (See page MX-49)

cardiagn.com